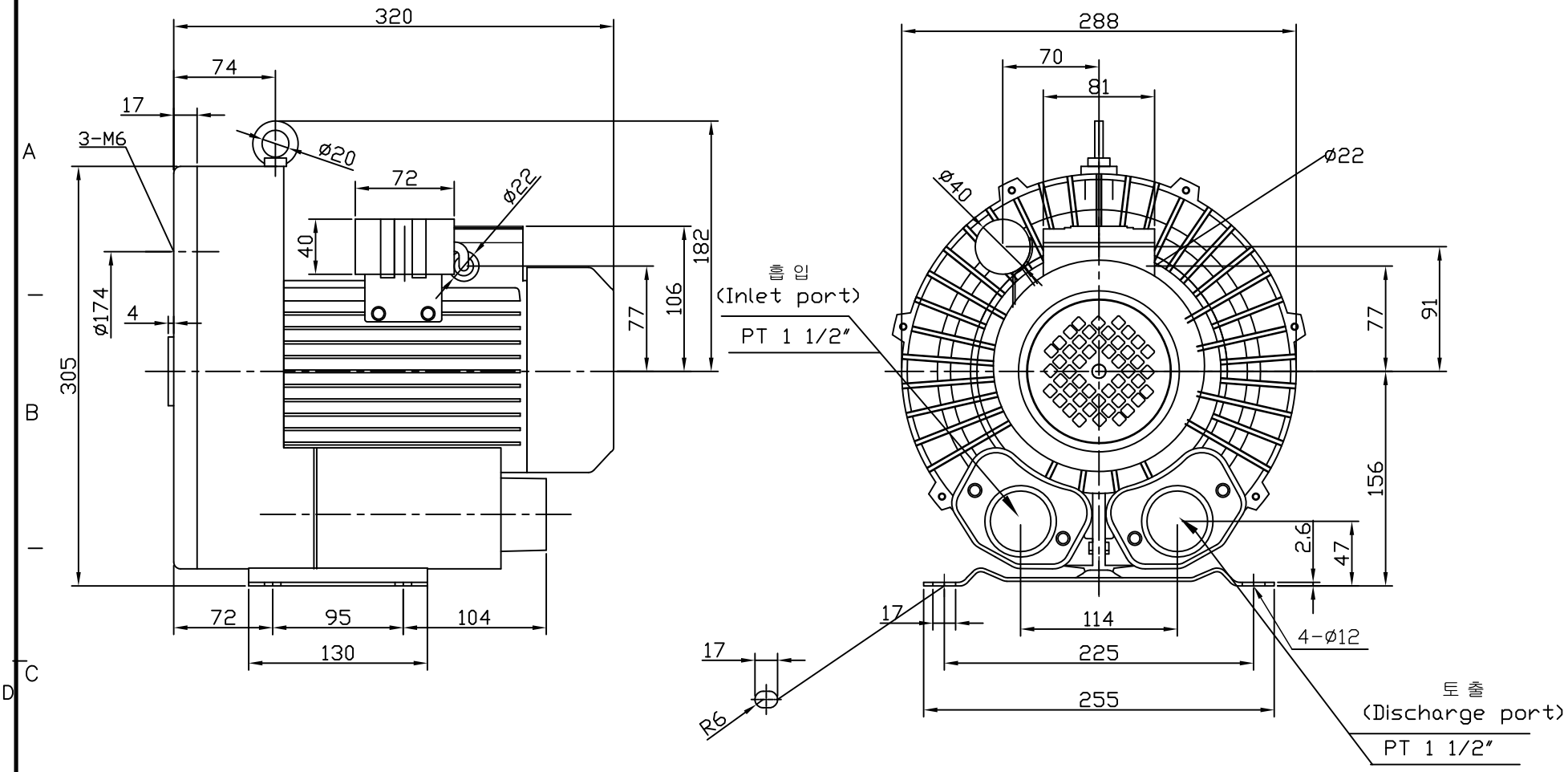

DATE	MARK	REMARK	DSGN	CHK	APRD

TYPE
RING BLOWER(Reg.Blower)
IHB-201(NEW)

APPROVED	CHECK	DESIGN	DRAWN

IN HA ELECTRIC

DWG.NAME
OUTLINE DIMENSION

THIRD ANGLE PROJECTION	SCALE	N/S	DATE 14.07.17

REF. DWG. NO. 1ø0.75kw2p

DWG. NO. 02010003