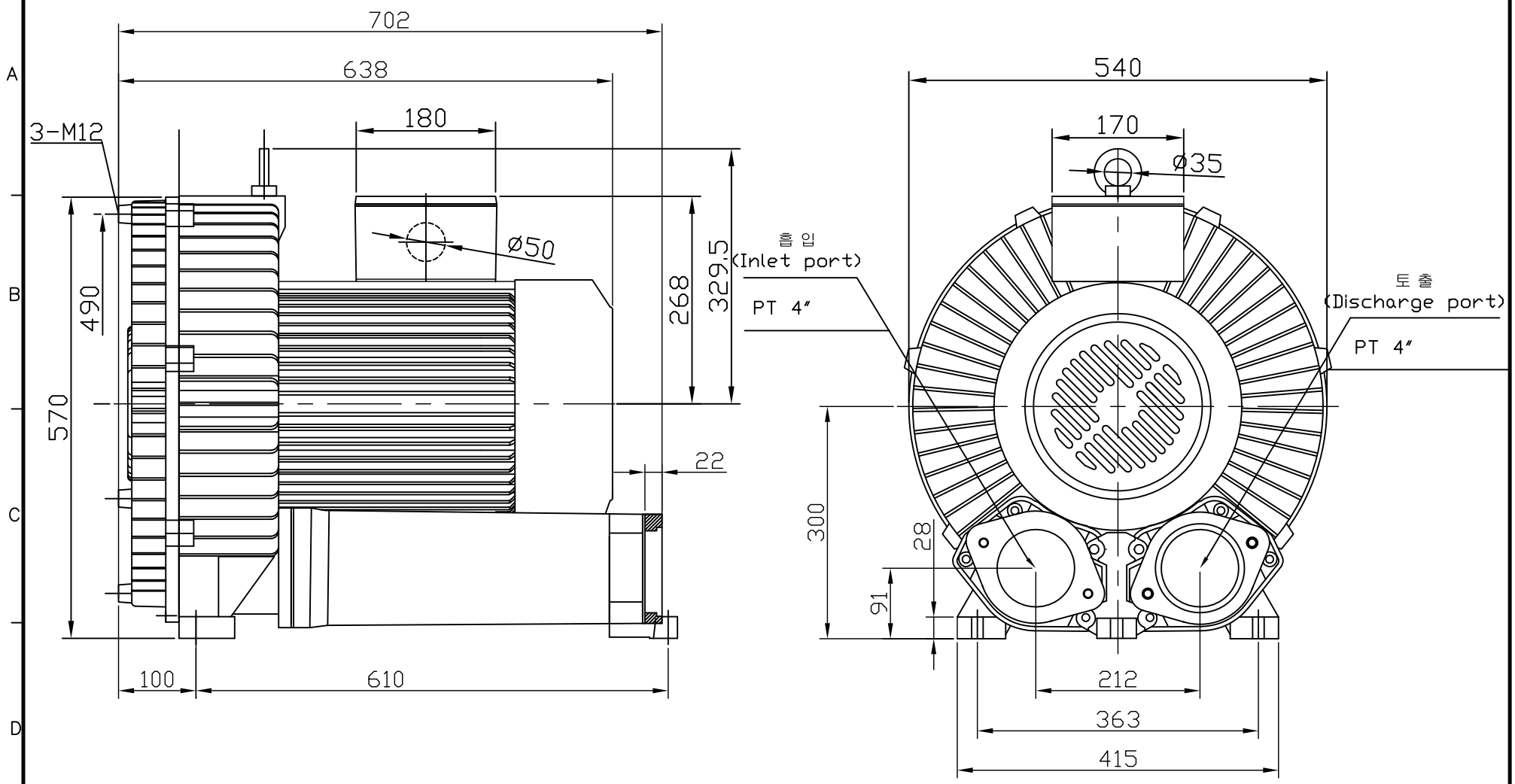

DATE	MARK	REMARK	DSGN	CHK	APRD

TYPE
RING BLOWER(Reg.Blower)
DHB-1300H

DWG.NAME
OUTLINE DIMENSION

APPROVED	CHECK	DESIGN	DRAWN	THIRD ANGLE PROJECTION	SCALE	N/S	DATE 13.03.18

REF. DWG. NO. 3Ø22.7kw2p

IN HA ELECTRIC

DWG. NO. 1300H003