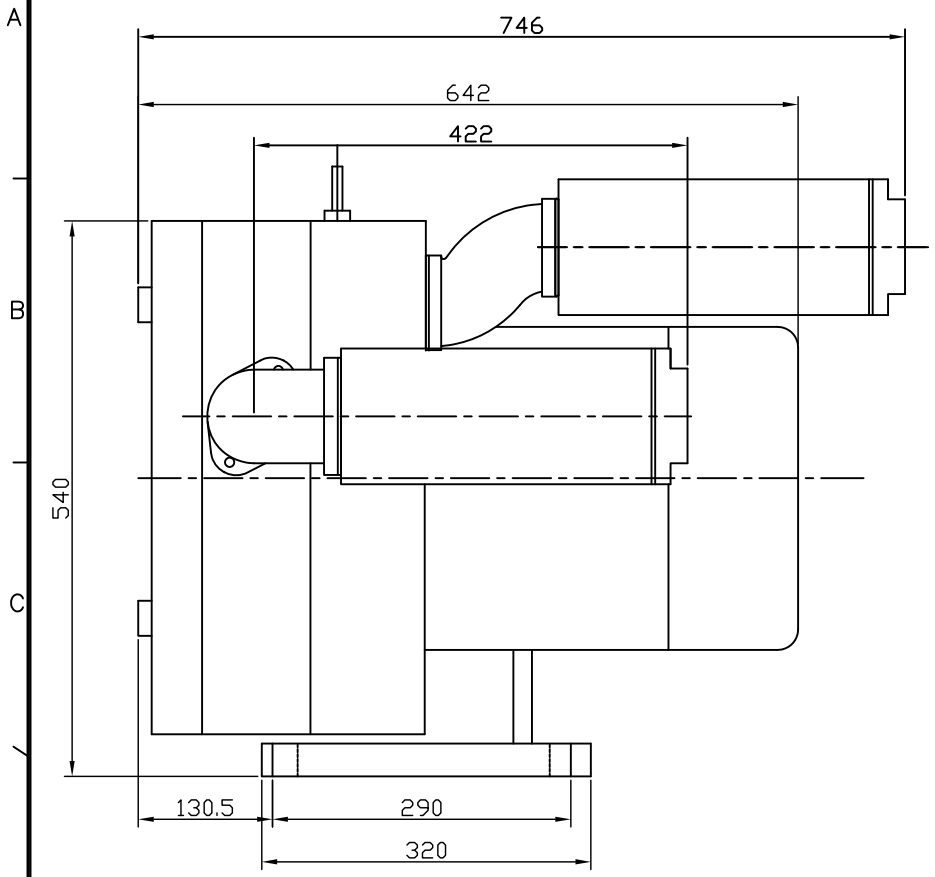

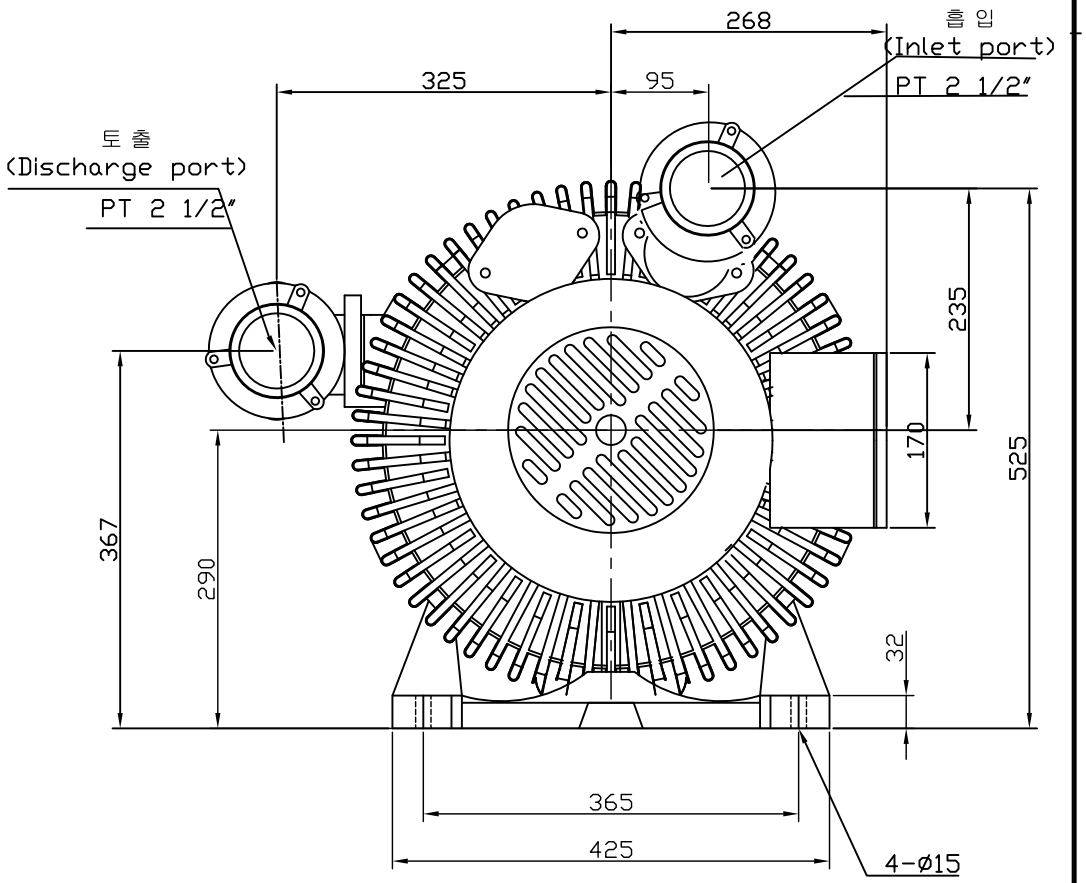

DATE	MARK	REMARK	DSGN	CHK	APRD

TYPE
RING BLOWER(Reg.Blower)
DHB-1102H

DWG.NAME
OUTLINE DIMENSION

APPROVED	CHECK	DESIGN	DRAWN	THIRD ANGLE PROJECTION	SCALE	N/S	DATE 99.05.30
				REF. DWG. NO.	3ø13.2kw2p		

IN HA ELECTRIC

DWG. NO. 11020003