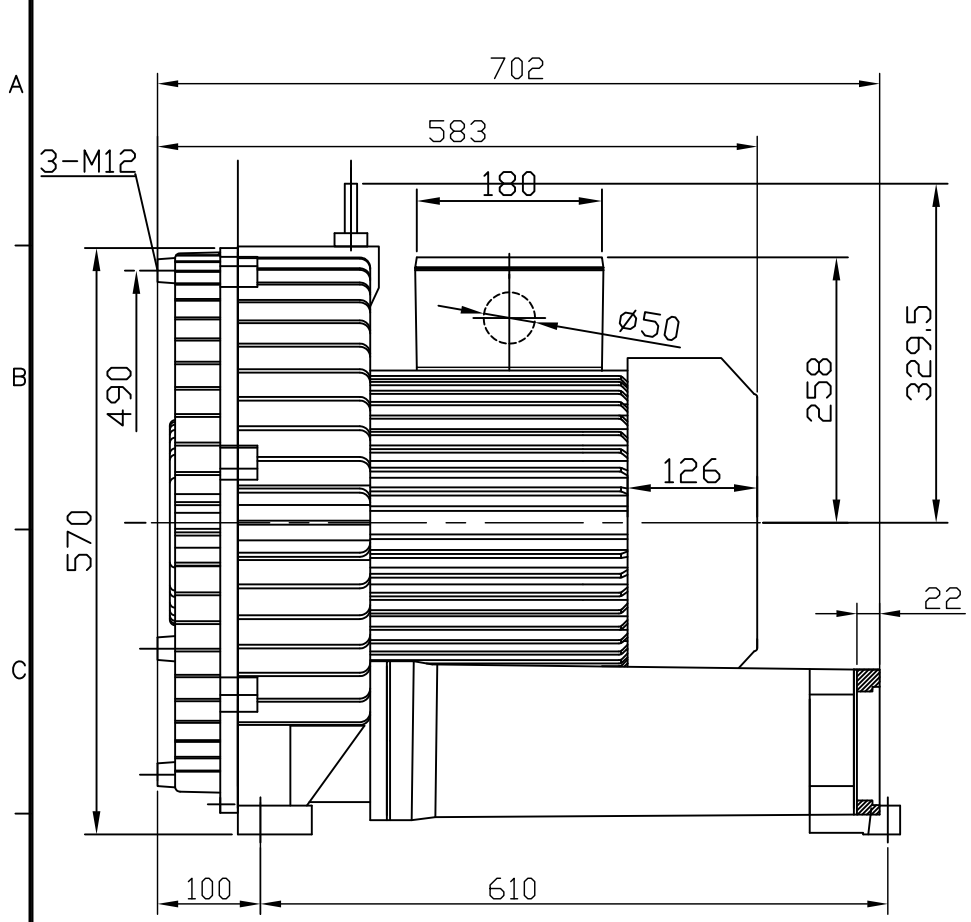

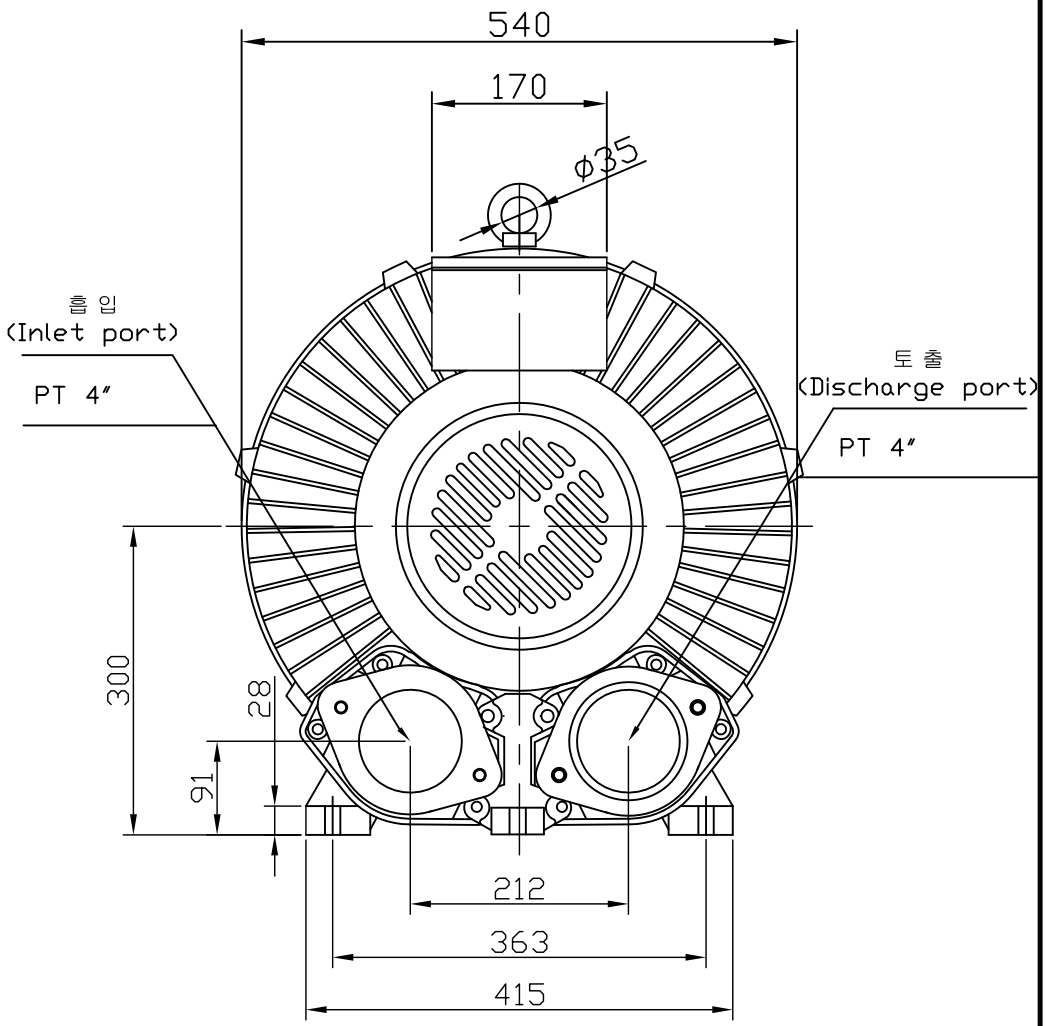

DATE	MARK	REMARK	DSGN	CHK	APRD

TYPE
RING BLOWER(Reg.Blower)
IHB-1100

DWG.NAME
OUTLINE DIMENSION

APPROVED	CHECK	DESIGN	DRAWN	THIRD ANGLE PROJECTION	SCALE	N/S	DATE 13.03.18
				REF. DWG. NO.	3Ø12.6kw2p		

IN HA ELECTRIC

DWG. NO. 11000003