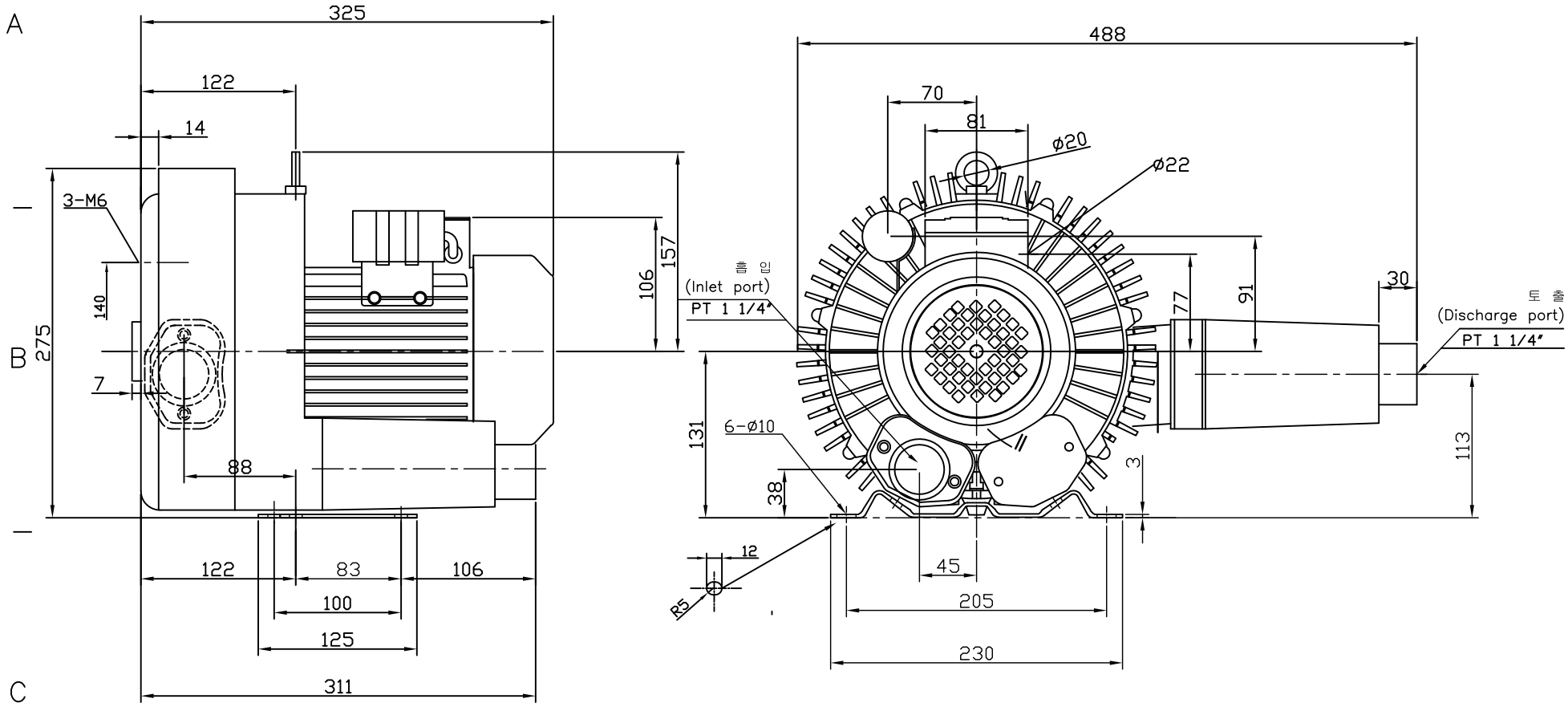

DATE	MARK	REMARK	DSGN	CHK	APRD

TYPE
RING BLOWER(Reg.Blower)
IHB-102-1

DWG.NAME
OUTLINE DIMENSION

APPROVED	CHECK	DESIGN	DRAWN	THIRD ANGLE PROJECTION	SCALE N/S	DATE 2014.07

REF. DWG. NO. 1φ0.4kw2p

IN HA ELECTRIC

DWG. NO. 01021003